RUSH ship tues 7

# Work Order ID 70374

*Monday, June 06, 2011 8:49:04 AM*



**Item ID:** D3875-1 **Accept** **Setup Start**

**Revision ID:**

**Item Name:** Floor Protector **Stop**

**Start Date:** 6/6/2011 **Start Qty:** ~~2.00~~ 3 **Cust Item ID:**

**Required Date:** 6/7/2011 **Req'd Qty:** 2.00 **Customer:**

**Reference:**

**Approvals:** **Process Plan:** CL **Date:** 11/06/06 **Tooling:** _____ **Date:** _____ **Run Start**

**QC:** _____ **Date:** _____ **SPC (Y/N):** _____ **Date:** _____ **Stop**

| Sequence ID/ Work Center ID | Operation Description | Set Up/ Run Hours | Tool ID | Tool # | Plan Code | Accept Qty | Reject Qty | Reject Number | Insp. Stamp |
|---|---|---|---|---|---|---|---|---|---|
| **Draw Nbr** / **Revision Nbr** | | | | | | | | | |
| D3875 / Rev A | | | | | | | | | |
| 100 | | 0.00 | | | | | | | |
| HandThermo | **Memo** | 0.00 | | | | x3 | | | 11/06/07 |
| Hand Finishing Thermoforming | 1-Cut Sheet to required Blank size | | | | | | | | |
| 105 | | 0.00 | | | | | | | |
| HandThermo | Dry Material | | | | | | | | |
| | **Memo** | 0.00 | | | | | | | 11/06/07 |
| Hand Finishing Thermoforming | Dry Sheet as per QSI022 POLYCARBONATE<br>Temp: 240° F<br>Time IN: 4:30 Am 11/06/06<br>Time OUT: 7:00 am 11/06/07 | | | | | | | | |

Dart Aerospace Ltd

| W/O: | | WORK ORDER CHANGES | | | | | |
|---|---|---|---|---|---|---|---|
| DATE | STEP | PROCEDURE CHANGE | By | Date | Qty | Approval Chief Eng / Prod Mgr | Approval QC Inspector |
| | | | | | | | |
| | | | | | | | |

**Part No:** _____ **PAR #:** _____ **Fault Category:** _____ **NCR:** Yes No **DQA:** _____ **Date:** _____

**Resolution:** _____ **Disposition:** _____ **QA: N/C Closed:** _____ **Date:** _____

| NCR: | | WORK ORDER NON-CONFORMANCE (NCR) | | | | | | |
|---|---|---|---|---|---|---|---|---|
| DATE | STEP | Description of NC Section A | Corrective Action Section B | | | Verification Section C | Approval Chief Eng | Approval QC Inspector |
| | | | Initial Chief Eng | Action Description Chief Eng | Sign & Date | | | |
| | | | | | | | | |
| | | | | | | | | |
| | | | | | | | | |

**NOTE:** Date & initial all entries

H:\fFORMS\Quality Assurance\approved QA\NCRWO RevE

# Work Order ID 70374

*Monday, June 06, 2011 8:49:04 AM*



**Item ID:** D3875-1 **Accept** **Setup Start** **Stop**

**Revision ID:**

**Item Name:** Floor Protector

**Start Date:** 6/6/2011 **Start Qty:** 2.00 **Cust Item ID:**

**Required Date:** 6/7/2011 **Req'd Qty:** 2.00 **Customer:**

**Reference:**

**Approvals:** **Process Plan:** _____ **Date:** _____ **Tooling:** _____ **Date:** _____ **Run Start** **Stop**

**QC:** _____ **Date:** _____ **SPC (Y/N):** _____ **Date:** _____

| Sequence ID/ Work Center ID | Operation Description | Set Up/ Run Hours | Tool ID | Tool # | Plan Code | Accept Qty | Reject Qty | Reject Number | Insp. Stamp |
|---|---|---|---|---|---|---|---|---|---|
| 110 | | 0.00 | | | | | | | |
| Thermoform | **Memo** | 0.00 | | | | x3 | | | DL 11/06/07 |
| Thermoforming Machine | 1-Machine Set-Up<br>2-Pre-heat Tool to required temp.<br>3-Thermoform as per Dwg and Folio #FTA0xxusing tool DT9435<br>Dwg Rev: A<br>Folio Rev: B | | | | | | | | |
| 120 | QC2- Inspect parts off machine FAI/FAIB | 0.00 | | | | | | | |
| QC | **Memo** | 0.00 | | | | x3 | | | DL 11/06/07 |
| Quality Control | Visuallly inspect part for proper formation and texture | | | | | | | | |
| 130 | QC8- Inspect parts - second check | 0.00 | | | | | | | |
| QC | **Memo** | 0.00 | | | | (x3) | | | |
| Quality Control | | | | | | | | | |

Dart Aerospace Ltd

| W/O: | | WORK ORDER CHANGES | | | | | |
|---|---|---|---|---|---|---|---|
| DATE | STEP | PROCEDURE CHANGE | By | Date | Qty | Approval Chief Eng / Prod Mgr | Approval QC Inspector |
| | | | | | | | |
| | | | | | | | |

**Part No:** _____ **PAR #:** _____ **Fault Category:** _____ **NCR:** Yes No **DQA:** _____ **Date:** _____

**Resolution:** _____ **Disposition:** _____ **QA: N/C Closed:** _____ **Date:** _____

| NCR: | | WORK ORDER NON-CONFORMANCE (NCR) | | | | | | |
|---|---|---|---|---|---|---|---|---|
| DATE | STEP | Description of NC Section A | Corrective Action Section B | | | Verification Section C | Approval Chief Eng | Approval QC Inspector |
| | | | Initial Chief Eng | Action Description Chief Eng | Sign & Date | | | |
| | | | | | | | | |
| | | | | | | | | |
| | | | | | | | | |

**NOTE:** Date & initial all entries

H:\fFORMS\Quality Assurance\approved QA\NCRWO RevE

# Work Order ID 70374

*Monday, June 06, 2011 8:49:04 AM*



**Item ID:** D3875-1
**Revision ID:**
**Item Name:** Floor Protector
**Start Date:** 6/6/2011 **Start Qty:** 2.00
**Required Date:** 6/7/2011 **Req'd Qty:** 2.00
**Reference:**

**Accept**

**Setup Start**
**Stop**

**Cust Item ID:**
**Customer:**

**Run Start**
**Stop**

**Approvals:** **Process Plan:** _____ **Date:** _____ **Tooling:** _____ **Date:** _____
**QC:** _____ **Date:** _____ **SPC (Y/N):** _____ **Date:** _____

| Sequence ID/ Work Center ID | Operation Description | Set Up/ Run Hours | Tool ID | Tool # | Plan Code | Accept Qty | Reject Qty | Reject Number | Insp. Stamp |
|---|---|---|---|---|---|---|---|---|---|
| 140 | | 0.00 | | | | | | | |
| HandThermo | **Memo** | 0.00 | | | | x3 | | | DL |
| Hand Finishing Thermoforming | 1-Trim to finished dimensions as per Dwg | | | | | | | | 11/06/07 |
| 150 | QC2- Inspect parts off machine FAI/FAIB | 0.00 | | | | | | | |
| QC | **Memo** | 0.00 | | | | x3 | | | DL |
| Quality Control | Complete FAI document | | | | | | | | 11/06/07 |
| 160 | QC5- Inspect part completeness to step on W/O | 0.00 | | | | | | | |
| QC | **Memo** | 0.00 | 8 11/06/07 | | | x3 | | | |
| Quality Control | | | | | | | | | |

Dart Aerospace Ltd

| W/O: | | WORK ORDER CHANGES | | | | | |
|---|---|---|---|---|---|---|---|
| DATE | STEP | PROCEDURE CHANGE | By | Date | Qty | Approval Chief Eng / Prod Mgr | Approval QC Inspector |
| | | | | | | | |
| | | | | | | | |

**Part No:** _____ **PAR #:** _____ **Fault Category:** _____ **NCR:** Yes No **DQA:** _____ **Date:** _____

**Resolution:** _____ **Disposition:** _____ **QA: N/C Closed:** _____ **Date:** _____

| NCR: | | WORK ORDER NON-CONFORMANCE (NCR) | | | | | | |
|---|---|---|---|---|---|---|---|---|
| DATE | STEP | Description of NC Section A | Corrective Action Section B | | | Verification Section C | Approval Chief Eng | Approval QC Inspector |
| | | | Initial Chief Eng | Action Description Chief Eng | Sign & Date | | | |
| | | | | | | | | |
| | | | | | | | | |
| | | | | | | | | |

**NOTE:** Date & initial all entries

H:\fFORMS\Quality Assurance\approved QA\NCRWO RevE

# Work Order ID 70374

*Monday, June 06, 2011 8:49:04 AM*



**Item ID:** D3875-1 **Accept** **Setup Start**

**Revision ID:** **Stop**

**Item Name:** Floor Protector

**Start Date:** 6/6/2011 **Start Qty:** 2.00 **Cust Item ID:**

**Required Date:** 6/7/2011 **Req'd Qty:** 2.00 **Customer:**

**Reference:**

**Approvals:** **Process Plan:** _____ **Date:** _____ **Tooling:** _____ **Date:** _____ **Run Start**

**QC:** _____ **Date:** _____ **SPC (Y/N):** _____ **Date:** _____ **Stop**

| Sequence ID/ Work Center ID | Operation Description | Set Up/ Run Hours | Tool ID | Tool # | Plan Code | Accept Qty | Reject Qty | Reject Number | Insp. Stamp |
|---|---|---|---|---|---|---|---|---|---|
| 170 | Identify as per dwg & Stock Location:_____ | 0.00 | | | | | 11/6/7 | | 3 |
| Packaging | **Memo** | 0.00 | | | | | | | |
| Packaging | | | | | | | | | |
| 180 | QC21- Final Inspection - Work Order Release | 0.00 | | | | | 11/6/7 | | |
| QC | **Memo** | 0.00 | | | | | | | |
| Quality Control | | | | | | | | | |

CLu 10/6/07

Dart Aerospace Ltd

| W/O: | | WORK ORDER CHANGES | | | | | |
|---|---|---|---|---|---|---|---|
| DATE | STEP | PROCEDURE CHANGE | By | Date | Qty | Approval Chief Eng / Prod Mgr | Approval QC Inspector |
| | | | | | | | |
| | | | | | | | |

**Part No:** _____ **PAR #:** _____ **Fault Category:** _____ **NCR:** Yes No **DQA:** _____ **Date:** _____

**Resolution:** _____ **Disposition:** _____ **QA: N/C Closed:** _____ **Date:** _____

| NCR: | | WORK ORDER NON-CONFORMANCE (NCR) | | | | | | |
|---|---|---|---|---|---|---|---|---|
| DATE | STEP | Description of NC Section A | Corrective Action Section B | | | Verification Section C | Approval Chief Eng | Approval QC Inspector |
| | | | Initial Chief Eng | Action Description Chief Eng | Sign & Date | | | |
| | | | | | | | | |
| | | | | | | | | |
| | | | | | | | | |

**NOTE:** Date & initial all entries

H:\fFORMS\Quality Assurance\approved QA\NCRWO RevE

# Picklist Print

*Monday, June 06, 2011 8:49:02 AM*



**Work Order ID:** 70374

**Parent Item:** D3875-1

**Parent Item Name:** Floor Protector

**Start Date:** 6/6/2011 **Required Date:** 6/7/2011

**Start Qty:** 2.00 **Required Qty:** 2.00

**Comments:** IPP Rev. A 09.02.06 New Issue DL
Add Step 105 Dry Material 10/04/21 DL
IPP Rev.B

| Component Item ID/ Item Name | Replacement Item ID | Mfg/ Purch | Bin Item | Primary Location | Last Location | Route Seq ID | Unit of Measure | Qty on Hand | Qty per Kit | Total Qty | Qty Issued | Date Issued | Status |
|---|---|---|---|---|---|---|---|---|---|---|---|---|---|
| MLEXS.118-90318-08<br>Lexan Sheet | | Purchased | No | | | 100 | sf | 2,100.005 | 9.84 | 19.68 | | | |

| Location | Loc Qty | Loc Code |
|---|---|---|
| therm | 2100.00578 | |
| 113127 | 2100.00578 | |

~~29.52~~ sf PL

DL 11/06/07

Dart Aerospace Ltd

| W/O: | | WORK ORDER CHANGES | | | | | |
|---|---|---|---|---|---|---|---|
| DATE | STEP | PROCEDURE CHANGE | By | Date | Qty | Approval Chief Eng / Prod Mgr | Approval QC Inspector |
| | | | | | | | |
| | | | | | | | |

**Part No:** _____ **PAR #:** _____ **Fault Category:** _____ **NCR:** Yes No **DQA:** _____ **Date:** _____

**Resolution:** _____ **Disposition:** _____ **QA: N/C Closed:** _____ **Date:** _____

| NCR: | | WORK ORDER NON-CONFORMANCE (NCR) | | | | | | |
|---|---|---|---|---|---|---|---|---|
| DATE | STEP | Description of NC Section A | Corrective Action Section B | | | Verification Section C | Approval Chief Eng | Approval QC Inspector |
| | | | Initial Chief Eng | Action Description Chief Eng | Sign & Date | | | |
| | | | | | | | | |
| | | | | | | | | |
| | | | | | | | | |

**NOTE:** Date & initial all entries

H:\fFORMS\Quality Assurance\approved QA\NCRWO RevE

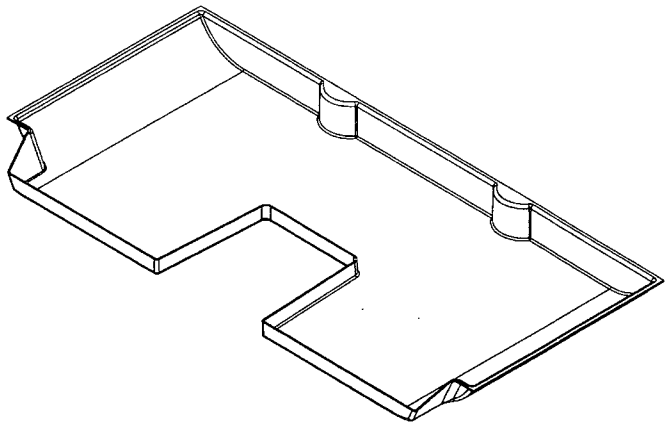

CL11/06/06
W/O: 70374

**D3875-1 FLOOR PROTECTOR (206B)**

RELEASED 09/05/05

NOTES:
1) MATERIAL: LEXAN 90318 (PROTECT-A-GLAZE), 0.118 THICK, 112-CLEAR (MLEXS.118-90318-08)
2) FINISH: NONE
3) TOLERANCES: PER DART QSI 018 UNLESS OTHERWISE NOTED
4) UNITS: INCHES UNLESS OTHERWISE NOTED
5) BREAK SHARP EDGES: 0.005 TO 0.010 MAX
6) IDENTIFICATION: IDENTIFY WITH DART P/N "D3875-1" USING VIBRATING STYLUS
7) WEIGHT: 4.0 lbs
8) TOOLING: THERMOFORM PER MOLD DT9475 PER DART QSI 022. TRIM PER MOLD
9) MINIMUM THICKNESS: 0.050" EXCEPT AS SHOWN

| REV. | DESCRIPTION | BY | DATE |
|---|---|---|---|
| A | NEW ISSUE | PH | 09.01.29 |

| | | |
|---|---|---|
| DESIGN | RH | DART AEROSPACE LTD<br>HAWKESBURY, ONTARIO, CANADA |
| DRAWN | RH | |
| CHECKED | | DRAWING NO. D3875 — REV. A — SHEET 1 OF 2 |
| MFG. APPR. | | |
| APPROVED | | TITLE FLOOR PROTECTOR (206B) — SCALE NTS |
| DE APPR. | | |
| DATE | 09.01.29 | |

COPYRIGHT © 2009 BY DART AEROSPACE LTD
THIS DOCUMENT IS PRIVATE AND CONFIDENTIAL AND IS SUPPLIED ON THE EXPRESS CONDITION THAT IT IS NOT TO BE USED FOR ANY PURPOSE OR COPIED OR COMMUNICATED TO ANY OTHER PERSON WITHOUT WRITTEN PERMISSION FROM DART AEROSPACE LTD

Dart Aerospace Ltd

| W/O: | | WORK ORDER CHANGES | | | | | |
|---|---|---|---|---|---|---|---|
| DATE | STEP | PROCEDURE CHANGE | By | Date | Qty | Approval Chief Eng / Prod Mgr | Approval QC Inspector |
| | | | | | | | |
| | | | | | | | |

**Part No:** _____ **PAR #:** _____ **Fault Category:** _____ **NCR:** Yes No **DQA:** _____ **Date:** _____

**Resolution:** _____ **Disposition:** _____ **QA: N/C Closed:** _____ **Date:** _____

| NCR: | | WORK ORDER NON-CONFORMANCE (NCR) | | | | | | |
|---|---|---|---|---|---|---|---|---|
| DATE | STEP | Description of NC Section A | Corrective Action Section B | | | Verification Section C | Approval Chief Eng | Approval QC Inspector |
| | | | Initial Chief Eng | Action Description Chief Eng | Sign & Date | | | |
| | | | | | | | | |
| | | | | | | | | |
| | | | | | | | | |

**NOTE:** Date & initial all entries

H:\fFORMS\Quality Assurance\approved QA\NCRWO RevE

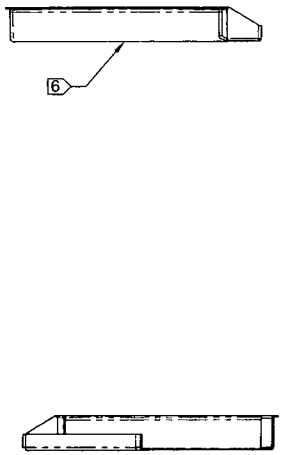


**SECTION A-A** B4-2

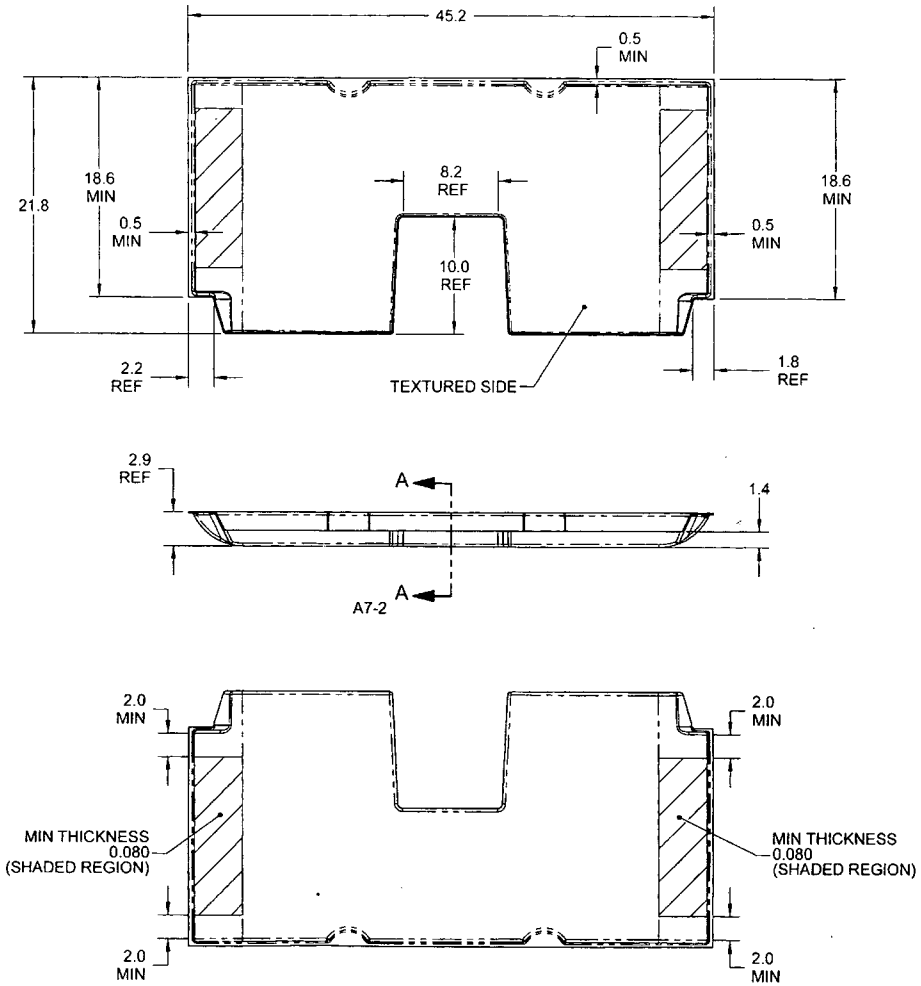


**D3875-1 FLOOR PROTECTOR (206B)**

RELEASED 09/05/05

| | | |
|---|---|---|
| DESIGN | | **DART AEROSPACE LTD** HAWKESBURY, ONTARIO, CANADA |
| DRAWN | | |
| CHECKED | | DRAWING NO. D3875 REV. A SHEET 2 OF 2 |
| MFG. APPR. | | |
| APPROVED | | TITLE FLOOR PROTECTOR (206B) SCALE NTS |
| DE APPR. | | |
| DATE 09.01.29 | | |

COPYRIGHT © 2009 BY DART AEROSPACE LTD
THIS DOCUMENT IS PRIVATE AND CONFIDENTIAL AND IS SUPPLIED ON THE EXPRESS CONDITION THAT IT IS NOT TO BE USED FOR ANY PURPOSE OR COPIED OR COMMUNICATED TO ANY OTHER PERSON WITHOUT WRITTEN PERMISSION FROM DART AEROSPACE LTD.

Dart Aerospace Ltd

| W/O: | | WORK ORDER CHANGES | | | | | |
|---|---|---|---|---|---|---|---|
| DATE | STEP | PROCEDURE CHANGE | By | Date | Qty | Approval Chief Eng / Prod Mgr | Approval QC Inspector |
| | | | | | | | |
| | | | | | | | |

**Part No:** _____ **PAR #:** _____ **Fault Category:** _____ **NCR:** Yes No **DQA:** _____ **Date:** _____

**Resolution:** _____ **Disposition:** _____ **QA: N/C Closed:** _____ **Date:** _____

| NCR: | | WORK ORDER NON-CONFORMANCE (NCR) | | | | | | |
|---|---|---|---|---|---|---|---|---|
| DATE | STEP | Description of NC Section A | Corrective Action Section B | | | Verification Section C | Approval Chief Eng | Approval QC Inspector |
| | | | Initial Chief Eng | Action Description Chief Eng | Sign & Date | | | |
| | | | | | | | | |
| | | | | | | | | |
| | | | | | | | | |

**NOTE:** Date & initial all entries

H:\fFORMS\Quality Assurance\approved QA\NCRWO RevE

| DART AEROSPACE LTD | Work Order: | 70374 |
|---|---|---|
| | | |
| **Description:** Floor Protector | Part Number: | D3875-1 |
| | | |
| **Inspection Dwg:** D3875 **Rev:** A | | Page 1 of 1 |

## FIRST ARTICLE INSPECTION CHECKLIST

[X] First Article [ ] Prototype

## THERMOFORMING SECTION

| Description | Accept | Reject | Method of Inspection | Comments |
|---|---|---|---|---|
| Inside Radii less than N/A " | | | | |
| Shape Definition | ✓ | | | |
| Texture Retention | ✓ | | | |
| Material imperfections such as bumps, cracks, voids, scratching | ✓ | | | |
| | | | | |
| | | | | |
| | | | | |
| | | | | |

| Measured by: | Dh. | Date: | 11/06/07 |
|---|---|---|---|

## TRIMMING SECTION

| Drawing Dimension | Tolerance | Actual Dimension | Accept | Reject | Method of Inspection | Comments |
|---|---|---|---|---|---|---|
| 0.050 | Min | 0.056" | ✓ | | Vern DL-02 | |
| 0.080 | Min | 0.096" | ✓ | | CAL TH-DT | |
| 45.2 | +/-0.100 | 45.3" | ✓ | | TAPE DL-01 | |
| 21.8 | +/-0.100 | 21.75" | ✓ | | TAPE DL-01 | |
| 1.4 | +/-0.100 | 1.41" | ✓ | | Vern DL-02. | |
| | | | | | | |
| | | | | | | |
| | | | | | | |
| | | | | | | |
| | | | | | | |
| | | | | | | |
| | | | | | | |

| Measured by: | Dh. | Date: | 11/06/07 |
|---|---|---|---|
| Audited by: | D | Date: | 11/06/07 |
| Prototype Approval: | N/A | Date: | N/A |

| Rev | Date | Change | Revised by | Approved |
|---|---|---|---|---|
| A | 09.09.15 | New Issue | KJ | |

Dart Aerospace Ltd

| W/O: | | WORK ORDER CHANGES | | | | | | |
|---|---|---|---|---|---|---|---|---|
| DATE | STEP | PROCEDURE CHANGE | By | Date | Qty | Approval Chief Eng / Prod Mgr | Approval QC Inspector |
| | | | | | | | |
| | | | | | | | |

**Part No:** _____ **PAR #:** _____ **Fault Category:** _____ **NCR:** Yes No **DQA:** _____ **Date:** _____

**Resolution:** _____ **Disposition:** _____ **QA: N/C Closed:** _____ **Date:** _____

| NCR: | | WORK ORDER NON-CONFORMANCE (NCR) | | | | | | |
|---|---|---|---|---|---|---|---|---|
| DATE | STEP | Description of NC Section A | Corrective Action Section B | | | Verification Section C | Approval Chief Eng | Approval QC Inspector |
| | | | Initial Chief Eng | Action Description Chief Eng | Sign & Date | | | |
| | | | | | | | | |
| | | | | | | | | |
| | | | | | | | | |

**NOTE:** Date & initial all entries

H:\fFORMS\Quality Assurance\approved QA\NCRWO RevE